PXT

The world's first

handheld transmission x-ray solution

Reduce Uncertainty

Confidence in Every Scan. With industry-leading penetration capabilities, the PXT ensures that no detail is missed. Engineered for law enforcement and NDT professionals, it delivers unmatched precision and clarity in the most demanding environments.

Optimizing Time

Streamlined Workflow for Critical Operations. With unparalleled depth and exceptional imaging quality, the PXT streamlines critical inspections, enabling faster scans and decisive threat evaluation in high-pressure scenarios.

Accomplish the Mission

Innovation at Your Service. The PXT represents the pinnacle of portable inspection, combining deep penetration and innovative technology to empower operators in overcoming the toughest challenges with confidence.

The most *advanced generation* of true portable inspection technology

POWERED BY APX ADVANCED PERFORMANCE

Quad line lasers for alignment

30° Field of view cone beam

13 MP Visual camera

Battery life: 4-6 hours

A new era of true Portable **INSPECTION technology**

videray™
info@videray.com
+1 (617) 286-3966
Videray.com
529 Main St, Suite 100, Charlestown, MA 02129

WARNING: CLASS 1 (IEC 60825-1:2014) LASER PRODUCT. DO NOT EXPOSE USERS TO TELESCOPIC OPTICS

PROUDLY MADE IN THE USA

PXT

A new era of true inspection technology

transmision
X-RAY IMAGER

Enhanced Performance
Unmatched Power, Unrivaled Capability
- 140 KeV / 10 watts energy output.
- Market-leading penetration depth for the toughest materials.

Always Connected, Always Updated
Future-Proof Technology
- Receive free Over-the-Air (OTA) updates to ensure cutting-edge functionality.
- Share scans effortlessly across devices with built-in wireless connectivity.

User-Centric Design
Built for Comfort and Precision
- 7" ultra-bright anti-glare touchscreen for clear visuals in any condition.
- Intuitive user interface that simplifies operation.
- Ergonomic design enables effortless use for both left- and right-handed operators.

Safety Without Compromise
Durability Meets Protection
- Ensures operator safety with less than 0.5mR/hr exposure, surpassing industry safety standards.

APX
ADVANCED PERFORMANCE

Advanced electronics platform that boosts X-ray system ***precision***, ***storage***, and ***speed***, delivering faster, higher-quality insights than ever before.

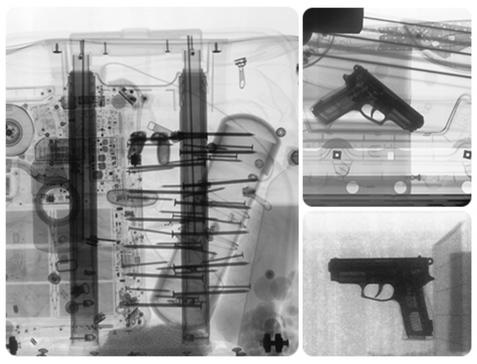

1 Infinity Detector for improved scan standoff distance and image performance

2 Integrated Active 7" 1200x 1920 FHD, 2500 nits, Color Touchescreen

3 Active-Passive Cooling System for the most extreme environments

4 Maximum Operator Radiation Exposure is 0.6 mR / hr

5 Tamper-Evident Encrypted Database for information security

6 128GB of storage, configurable up to 1TB

7 Left and Right-handed ergonomic operation

8 Camera, Quad line lasers and flashlights for an enhanced inspection process

9 Easy-access compartment for replacing 6 hours battery

10 USB-C, USB 3.0, Wi-Fi, Bluetooth, and 5G Onboard Modem or 4G/5G Hotspot
*Requires external cellular plan

Most compact imager to easily maneuver and **scan around** tight spaces

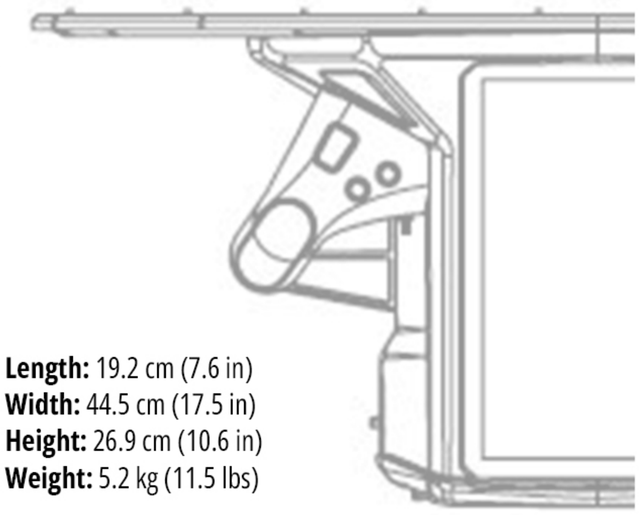

Length: 19.2 cm (7.6 in)
Width: 44.5 cm (17.5 in)
Height: 26.9 cm (10.6 in)
Weight: 5.2 kg (11.5 lbs)

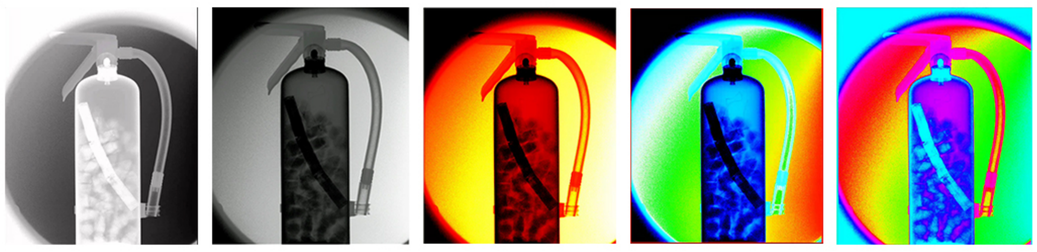

INVERT | PXT FILTERS | RED HOT | THERMAL | SPECTRUM

Imaging & Analyzing:
Superior Imaging Filters

Providing more detail to the operator regarding anomalies & suspect Items detected

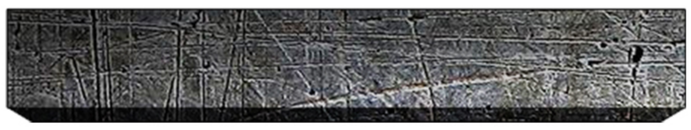

See through up to 40mm of steel in combination with MTP+

Market leading steel penetration

videray
info@videray.com +1 (617) 286-3966 Videray.com 529 Main St, Suite 100, Charlestown, MA 02129

WARNING: CLASS 1 (IEC 60825-1:2014) LASER PRODUCT. DO NOT EXPOSE USERS TO TELESCOPIC OPTICS

PROUDLY MADE IN THE USA